stream33

Shower Drain Installation Guide

Please be aware that the installation may be different based on the job site. These instructions serve as a general guideline for installation. Please refer the diagram below to make sure the shower drain has been correctly installed.

S33-PSD2
S33-PSDSS2

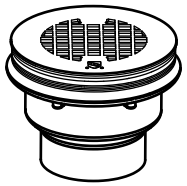

Important:

Observe all local plumbing and building codes.

If possible, assemble the drain to the shower base prior to shower base installation.

1. Remove strainer/grid from the drain upper body

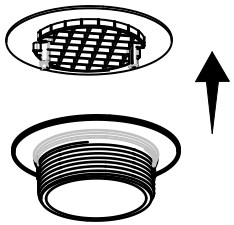

2. Fix the drain upper body to the drain base using putty. Place rubber washer and paper as pictured below, then thread the lower drain body to the upper drain body. Tighten the two parts firmly, be sure to not over tighten. Adjustable wrench is recommended. Remove excess putty if needed.

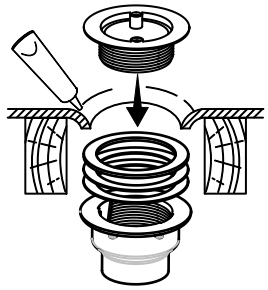

3. Cut the outlet tube into the suitable height, to match the shower base.

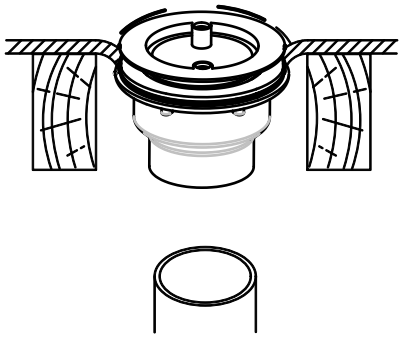

4. Glue the outer edge of the outlet tube, then fix the floor drain to the tube.

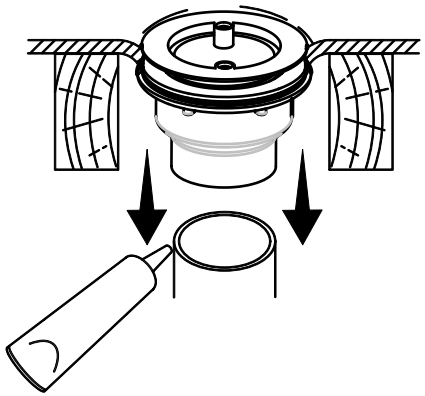

5. Install the grid on the floor drain.

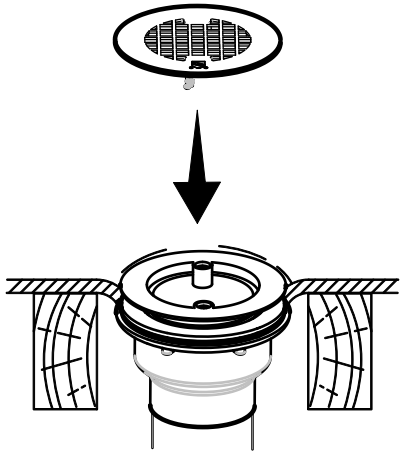

Installation Exploded Drawing

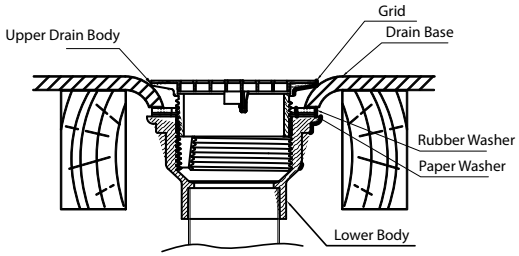

WARRANTY

Stream33 Products LLC(Stream33) warrants to the ORIGINAL PURCHASER that its shower drains shall be free from defects in material and workmanship under normal use and service FOR ONE (1) YEAR. This warranty cannot be transferred-It is extended only to the original purchaser. By accepting and keeping this Product you agree to all of the warranty terms and limitations of liability described below. Stream33's obligations under the warranty set forth above shall be to replace any Stream33 shower drain which is defective.

WHAT IS NOT COVERED?

The warranty above does not cover and Stream33 is not liable for ,(i)installation,(ii)any labor charges or (iii)products which have been damaged as a result of any accident,misuse,abuse, neglect,improper installation or maintenance,the use of abrasive or organic solvent cleaners,modification,failure to use the shower drain in accordance with instructions provided by Stream33.

HOW TO OBTAIN WARRANTY SERVICE

Contact our warranty department at 844-481-5004 to report the defect. Return failed product with proof of purchase, your name, and address within 30 days of failure to:

Stream33 Products LLC
350 Courtney Road
Sebring, Ohio 44672 USA

LIMITATION OF LIABILITY

Stream33's liability on any claim of any kind, including, without limitation, warranty, negligence and/or breach of contract, shall in no case exceed the purchase price paid by the Customer. IN NO EVENT SHALL STREAM33 BE LIABLE FOR ANY SPECIAL, INCIDENTAL, CONSEQUENTIAL (INCLUDING, WITHOUT LIMITATION, DAMAGE TO PROPERTY) OR PUNITIVE DAMAGES, DAMAGES IN THE NATURE OF PENALTIES OR SIMILAR OR RELATED DAMAGES OF ANY KIND.

DISCLAIMER OF WARRANTIES

STREAM33 EXPRESSLY DISCLAIMS ALL WARRANTIES, EXCEPT EXPLICITLY STATED HEREIN, TO THE FULLEST EXTENT PERMITTED BY LAW, WHETHER WRITTEN, ORAL, EXPRESS OR IMPLIED, INCLUDING ANY WARRANTY OF PERFORMANCE, MERCHANTABILITY, FITNESS FOR A PARTICULAR PURPOSE, AND NON INFRINGEMENT. THIS DISCLAIMER INCLUDES ANY ORAL WARRANTIES OR REPRESENTATIONS MADE OR IMPLIED BY ANY AGENT, EMPLOYEE, SUBCONTRACTOR, MANAGER DIRECTOR AND/OR REPRESENTATIVE OF STREAM33

© 2019 Stream33 Products LLC