Stainless Steel ADA Double Bowl Kitchen Sink

FEATURES

- ADA compliant
- Sink size: 33"x 22"
- Cutout instructions included in package
- Rear drain
- 36" Minimum cabinet size
- Stainless steel
- Top mount
- 3-1/2" Drain opening
- Meets or exceeds the following:
  - ASME A112.19.3-2017/CSA B45.4-17

AVAILABLE FINISHES

STAINLESS STEEL

Finish	Model	Gauge	Depth	ID
	S3333226ADA	20 Ga	6"	.3570052

Note: Installers should always use the template that is provided with each sink when making cuts in a countertop. The dimensions provided in the Installation Manual / Spec Sheet are a general reference for the product size. They should not be used to make cuts in countertops for sink installation. Typical production variances can cause slight differences in the dimensions of finished pieces. Therefore, each countertop cutout should be inspected & tested with the sink that is to be installed, before further countertop cuts are made. Please contact an associate if you did not receive or cannot find the cutout template for your sink.

WARRANTY

10-Year warranty. Visit stream33.com for details.

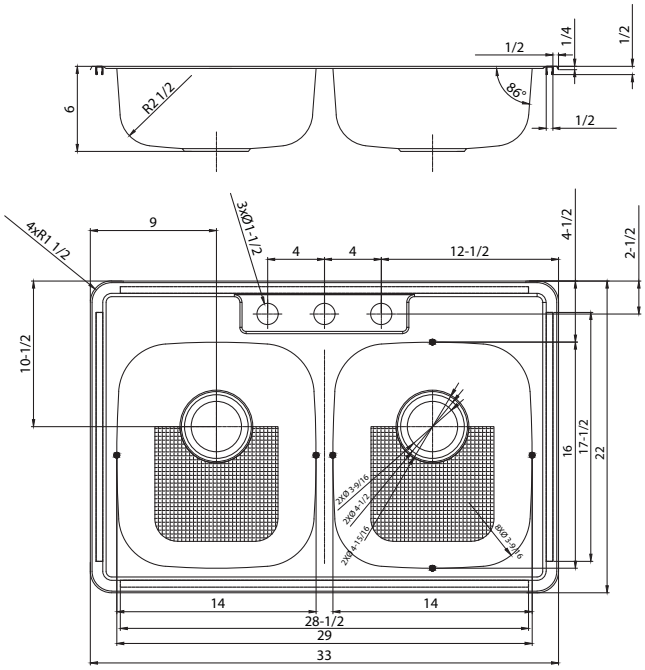

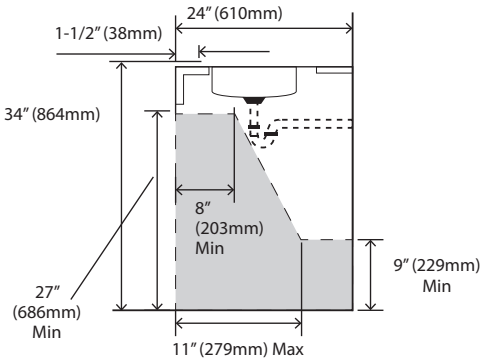

Recommended ADA Installation