A² Composite Shower Assembly

S33A2-6034CSA

60″ x 34″ x 76″ (1524mm x 864mm x 1931mm)

FEATURES

- Reinforced Age-In-Place Backing
- Durable smooth finish
- 4-Piece molded sectionals
- Pre-leveled base
- Caulkless installation
- Leakproof right angle joint flanges
- Easy wedge and lock installation
- Multiple integral soap shelves
- Center drain
- Slip-resistant, textured bottom
- Available in White
- 15-Year residential limited warranty
- Meets or exceeds the following:
  - CSA B45.5/IAPMO Z124

What is A² Composite?

Lightweight and durable, our A² Composite is an engineered compound of resin, glass and special fillers formed into sheets. These sheets are then placed under high pressure and heat to liquefy the compound, allowing it to flow and take the shape of almost any form imaginable. The results are simple, stylish and a snap to install.

What Does Reinforced Age-In-Place Backing Mean?

Our reinforced walls have wood support installed on the back of every back and sidewall to provide support for the installation of grab bars. You may not need them today, but they are there to offer support when you need it in the future.

A² Composite Shower Assembly

S33A2-6034CSA

60″ x 34″ x 76″ (1524mm x 864mm x 1931mm)

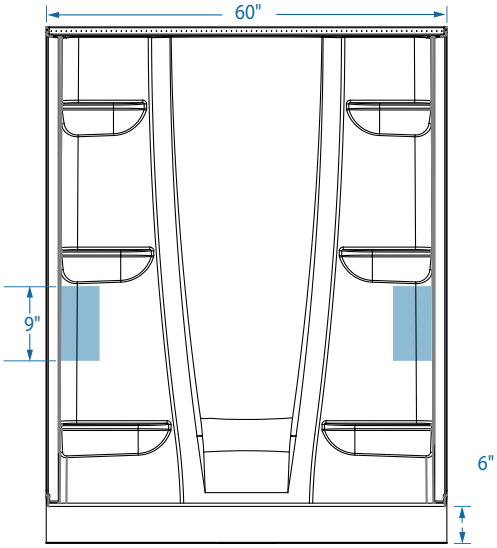

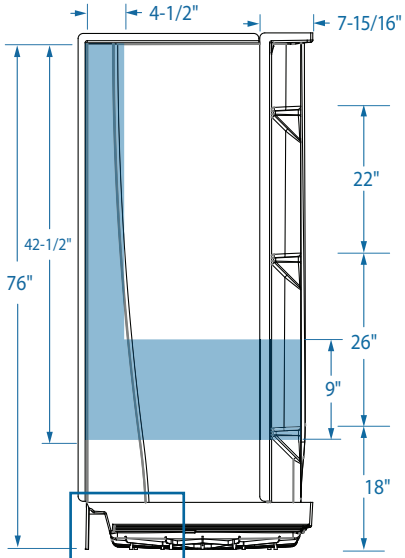

Figure A.

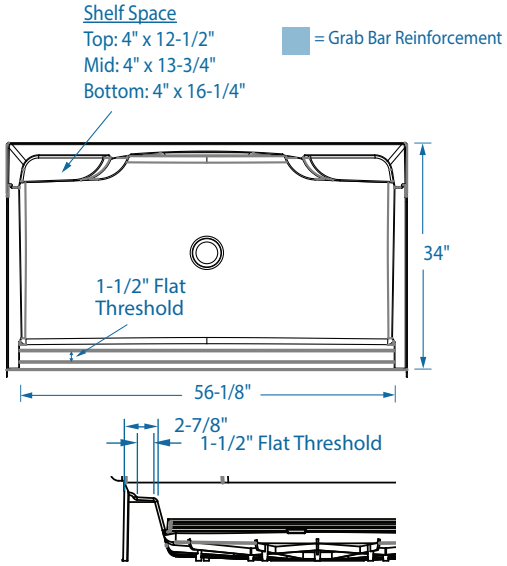

Figure A.

FEATURES

Dimensional Tolerance ± 3/8″. Dimensions needed for site preparation should be measured from the unit. Stream33 assumes no responsibility for preparatory work.

Model	Material	Wall Finish	Pieces	Seat	Drain	Net Wt.	Pkg. Wt.
S33A2-6034CSA	A² Composite	Smooth	4	—	Center	145 lbs (66 kg)	153 lbs (69 kg)

DIMENSIONS

Specifications	
Width: Overall / Net	60″ (1524mm)
Depth: Overall / Net	35-1/8″ (892mm) / 34″ (864mm)
Height: Overall / Net	77-3/8″ (1965mm) / 76″ (1931mm)
Enclosure Opening	56-1/8″ (1426mm)
Skirt Height	6″ (153mm)
Drain Rough-In (from back wall)	16-1/2″ (419mm)
Drain Rough-In (from side wall)	30″ (762mm)
Drain: Diameter / Clearance	3-1/4″ (83mm) / 3/8″ (10mm)

FRAMING DIMENSIONS
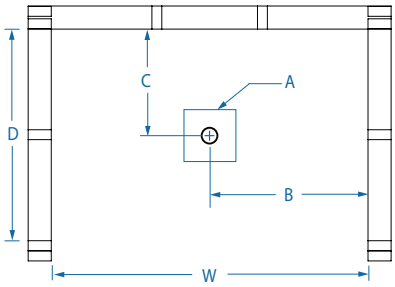
Type	Depth (D)	Width (W)	Height (H)	A	B	C
Alcove	35-1/8″ (892mm)	60″ (1524mm)	77-3/8″ (1965mm)	Box Out	30″ (762mm)	16-1/2″ (419mm)